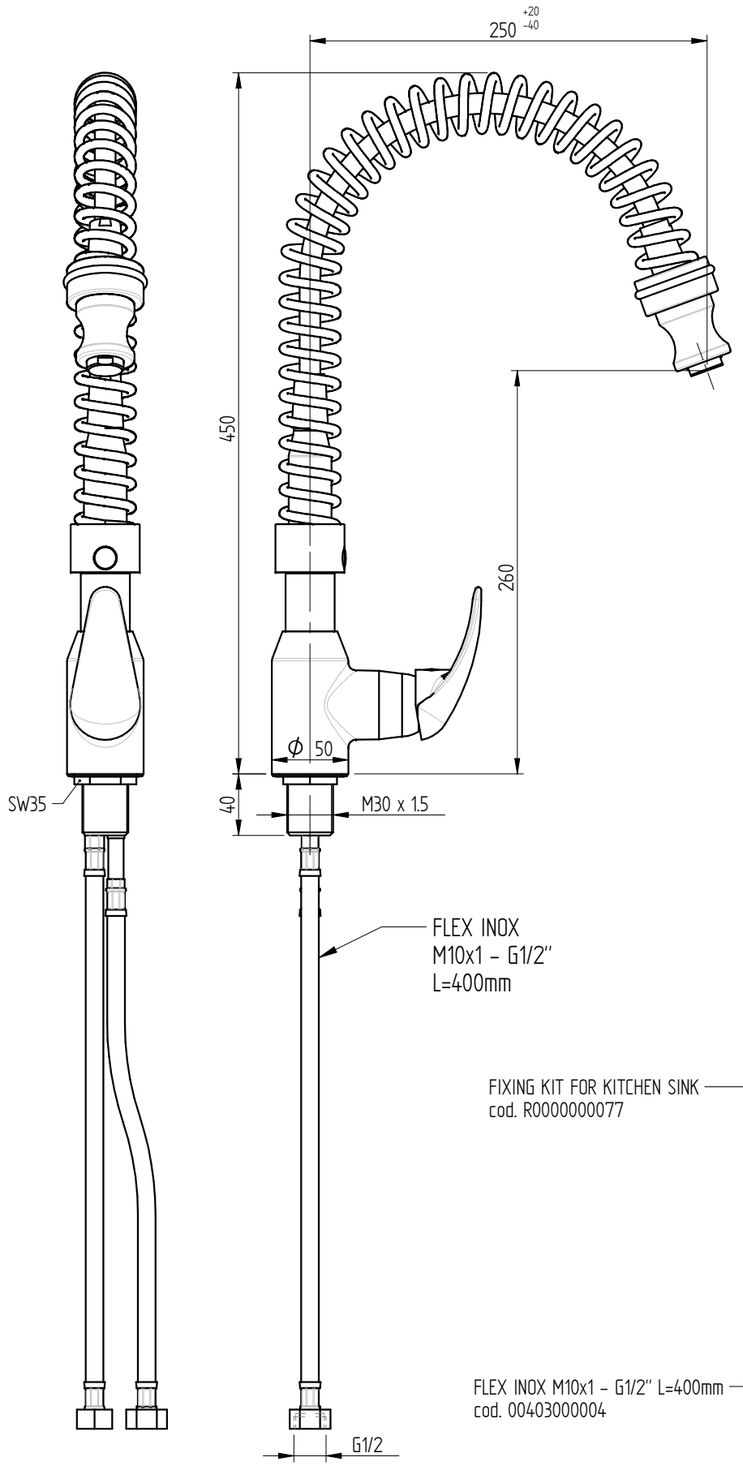

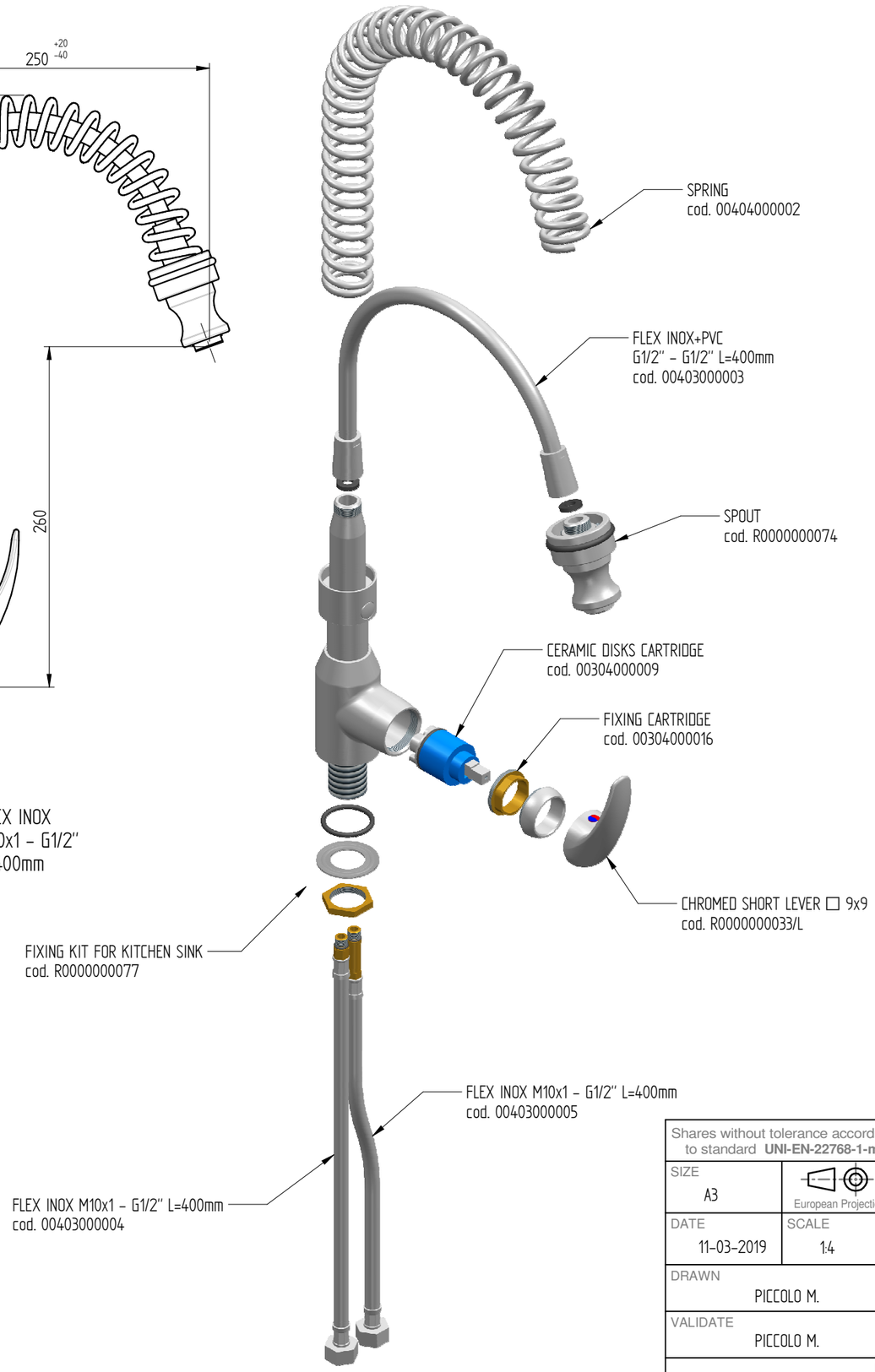

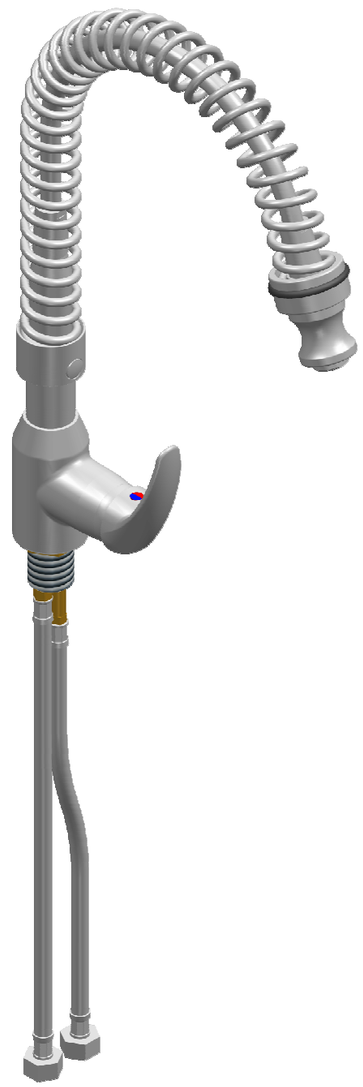

sink fixing hole : ø30,5 mm

Shares without tolerance according to standard **UNI-EN-22768-1-m**	DESCRIPTION	CODE EROS004
SIZE A3 / European Projection	ONE HOLE SINK MIXER TAP WITH SPOUT	WEIGHT 4,02 Kg
DATE 11-03-2019 / SCALE 1:4	MONOLITH DESIGN AND TECHNOLOGICAL RESEARCH FOR WATER	
DRAWN PICCOLO M.		
VALIDATE PICCOLO M.	VIA DELL'ARTIGIANO 8/F-8-G , 31050 MONASTIER di TREVISO (TV) tel: 0422 842157 - fax: 0422 708978	

DONE WITH DESIGN CAD - PROHIBITED THE CHANGES MANUAL

Rev. 00